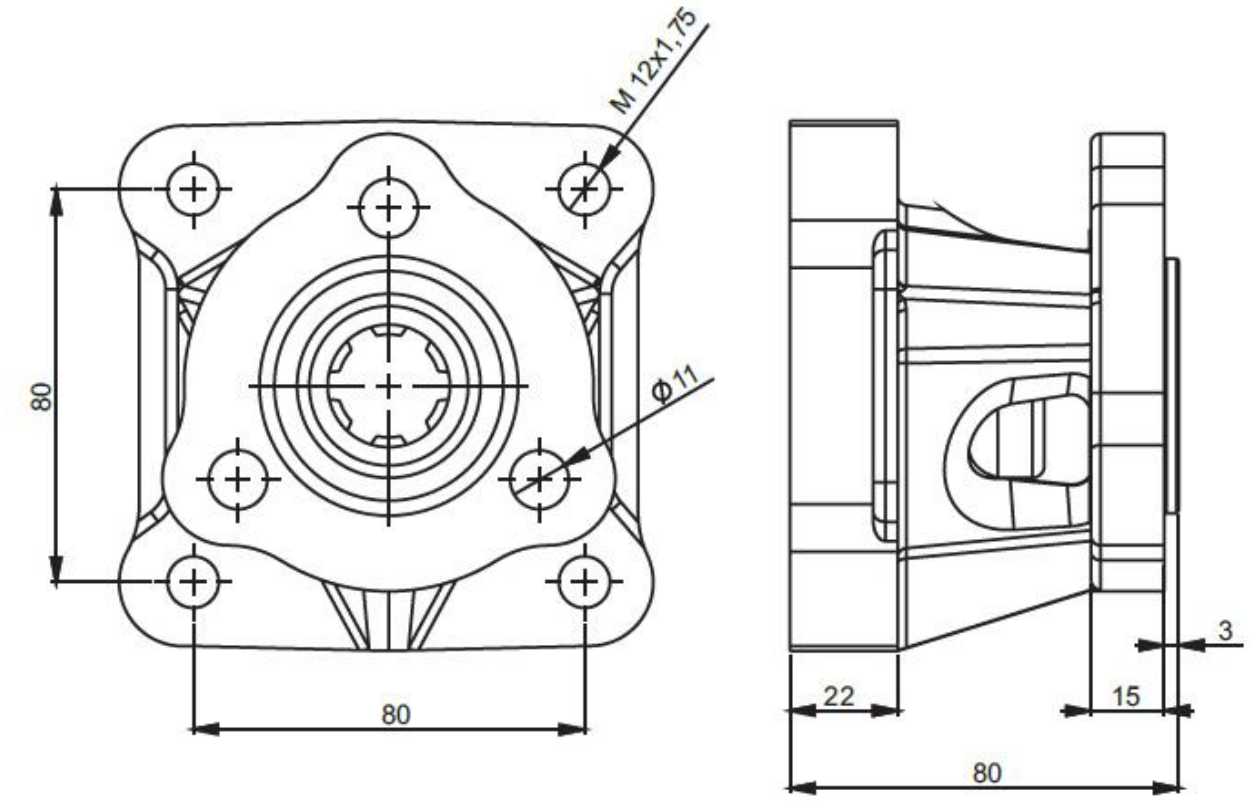12894 [mm]